Czech Metrology Institute
Notified Body No. 1383
Okružní 31, 638 00 Brno, Czech Republic
tel. +420 545 555 111, fax +420 545 222 728
www.cmi.cz

V 3112

EU-TYPE EXAMINATION CERTIFICATE

Number: TCM 311/12 - 4902

Addition 2

This addition replaces all previous versions of this certificate in full wording.

In accordance: with Directive 2014/32/EU of the European Parliament and of the Council on the harmonisation of the laws of the Member States relating to the making available on the market of measuring instruments (implemented in Czech Republic by Government Order No. 120/2016 Coll.).

Manufacturer: ZPA Nová Paka, a.s.
Pražská 470
509 39 Nová Paka
Czech Republic

For: calculator as sub-assembly of a thermal energy meter
type: INMAT 57, INMAT 57D
Mechanical environment class: M1
Electromagnetic environment class: E2
Limit temperature values (0-200) °C
Limit temperature difference values (3-200) K

Valid until: 18 January 2032

Document No: 0115-CS-A001-12

Description: Essential characteristics, approved conditions and special conditions, if any, are described in this certificate.

Date of issue: 22 March 2022

Certificate approved by:

Český metrologický institut -3-

RNDr. Pavel Klenovský

1 Description of meter

1.1 Use of meter

Calculators of type INMAT 57, INMAT 57D are designed for measurement of heat in accordance with Government Order No. 120/2016 Coll. (which implements Directive of the European Parliament and of the Council 2014/32/EU on measuring instruments in Czech Republic).

Remark 1: heat meters INMAT 57 and INMAT 57D are also able:

- to measure a flow and cold energy transmitted by water in accordance with standard EN 1434,-1:2019,
- to measure flow and energy transmitted by not freezing substances.

Both application of this remark are not covered by over presented Directives actually. It is regulated by national prescriptions of EU member states.

Remark 2: Adition 2 of this Certificate comes out from upgrading of SW version and regarding CRC32 utilization (based on WELMEC Guide 7.2:2021)

1.2 Description of design

INMAT 57, resp. INMAT 57D are located in a plastic box covered with a lid that can be tilted away. A display and two control push-buttons are located on the lid. The design layout enables the control without opening the lid. After tilting the lid, a sealable cartridge is accessible, which determines all metrological parameters of the device. The cartridge is provided with a connector terminal board, which can be split, for the connection of sensors of the measured quantities. Wires are brought to the terminal board with sealed outlets. On the bottom of the box, there are clamps for the connection on the wall.

The box of the calorimetric counter is adapted to the installation on the wall and enables a simple replacement of partial parts of the unit.

The calorimetric counter is equipped with a two-line, 16-digit alpha-numerical LCD display with a back light. The back light can be switched off automatically after the expiration of the interval after the last pressing of a push-button, which is set-up by the user.

The display is used to display the measured and calculated values, warning messages and data about the configuration. The measured values are displayed on the top line of the display, including the applicable name of the quantity and unit. On the second line, a description of the displayed item is indicated. To display a warning messages, the bottom line of the display is used. If more conditions for the record of error messages during the operation are met, the warning messages are ordered in the list of warning messages, which can be viewed and removed with the push-button "ACK" in the menu Diagnostics.

The basis of the meter consists of the mathematical module with relevant implemented calculating methods (FLASH module), into the memory block of which (EEPROM/FRAM module), data about the measured quantity are stored on on-going basis. The EEPROM/FRAM module does not need back-up power supply to preserve the information. Electronic circuits are supplied from an external power supply source.

Meters are produced in single version as INMAT 57 (figures from 1 to 5) and in double version as INMAT 57D (figures from 6 to 9). By INMAT 57D (double version) utilization, an application of measurements either in one or in two separated circuits are possible.

1.3 Communication, configuration and security

A change in the set-up and permitted parameters is possible with the use of the communication interface and suitable software, e.g. SWK 45702. With the use of this software, it is possible to read all the data of the instantaneous and recorded values and parameters of the measuring system (including system, service and diagnostic data). Data transmission can be realized via the communication interface RS485 or M-Bus. By double version (INMAT 57D) an optical interface is to disposition also.

Any changes in the data or parameters and constants related to the calculating programme and applicable connected meters, which influence metrological parameters of the calorimetric meter, are realized by re-programming memory of the processor and external memories EEPROM. Re-programming is conditioned by inserting the interconnecting piece (SECURITY) into the board of the meter and is protected with a security mark. Permitted changes in the parameters, which can be changed by the user, are protected with passwords. For this purpose, the mathematical module is equipped with user and metrological passwords, which block changes in the relevant parameters. During the entry of the relevant blocked value, the calorimetric counter requests entering a valid password. The user password can be changed or blocked; however, it is conditioned with knowledge of the current user password. The metrological password may only be modified but not be blocked. To change it, knowledge of the current user

password is required again. Forgotten passwords cannot be found out without violation of the security marks, which prevents from an authorized intervention into the calorimetric counter.
After metrological verification of selected method of measurement by metrological authority, meters are available to be switched on into a mode of „one-time setting". Here, it is possible to set (one-time) all metrological constants of selected method of measurement (f. inst. impulse number of flowmeter, units of measurements, etc.). In this mode, a meter is delivered to the final customer who performs a one-time setting of constant. After setting a meter can be regularly applicated on place of installation. All values of important quantities (maily heat energy) are starting from zero-value. Without setting of constants a meter remains in „one-time setting" mode without any measurements.
The gauges are manufactured according to the technical documentation of the manufacturer ZPA Nová Paka, a.s., number 224334 from 13.08.2012 for single version , and numbers 223267 from 27.3.2013, 223630 from 25.3.2013, 223300 of 11.3.2013 (for double version).
As for the new version of SW and CRC32 utilization, following documents were presented by manufacturer: Supporting documents, dated 19th of November 2021, Specifications for Extension I4: Thermal Energy Meters MID MI-004, dated 3rd of February 2022, Requirements for Type P, dated 9th of February 2022 and Statutory Declaration as part of the SW validation of Thermal Energy Meters INMAT 57 and INMAT 57D, dated 9th of February 2022.

1.4 Principle of activity
INMAT 57, INMAT 57D evaluate quantity of heat transferred by water.
The activity of the meters INMAT 57, INMAT 57D is controlled with a one-chip micro-computer. Analogue input signals of the measured input quantities are transferred to the digital form with the A/D converter and then they are processed in the micro-computer. Then the measured values of the quantities are standardized – their value in physical units is expressed, whereby system variables are created. On the basis of such obtained data, the mathematical module calculates the calculation and user variables. The calculations are defined with mathematical relations in the firmware of the mathematical module. Furthermore, the following is also specified: quantities for summarization, calibration constants, calculation and user constants, non-linearity of input sensors, permitted limits of input and output quantities, range of output current signal, formats of display or accompanying text for the required output quantities.

1.5 Other items of the heat meter
Temperature sensors and flow sensors, which are connected to the calorimetric counter, shall be compatible.

2 Technical parameters

2.1 Operating conditions

Range of ambient temperature:	(-10 to 55) °C;
Relative ambient humidity:	(5 to 100) % with condensation;
Cover ingress protection grade:	IP 65;
Operating position:	vertical (outlets facing downwards);
Environment class pursuant to ČSN EN 1434:	A or C.

2.2 Power supply

2.2.1 Power supply, single version
The calorimetric counter shall be supplied from a SELV source, the output of which complies with ČSN EN 61010-1, Article 6.3.

Supply voltage:	DC 24 V;
Tolerance of supply voltage:	± 25 %.

2.2.2 Power supply, double version
Supply voltage: AC 230 V, 50 Hz;

2.3 Real time clock
In case of a power supply failure, the real time clock is supplied from 3 V Li battery CR232 located on the motherboard (refer to figures 4, 7, 8).

2.4 Inputs and outputs

2.4.1. Number of inputs and outputs

2.4.1.1 Number of inputs and outputs, single version:

Impulse and frequency input:	1;
Analogue current inputs:	1;
Resistance inputs for temperature measurement:	2;
Digital output – LCD display:	1;
Analogue output Iout (optional):	1;
Binary (impulse) output (optional):	1;

2.4.1.2 Number of inputs and outputs, double version:

Impulse and frequency input:	3;
Analogue current inputs:	2;
Resistance inputs for temperature measurement:	4;
Digital output – LCD display:	1;
Analogue output Iout (optional):	2;
Binary (impulse) output (optional):	2;

2.4.2 Specification of inputs and outputs

Input signals for quantity: flow

- From the flow meter – current unified signal (0 to 20) mA or (4 to 20) mA;
- From the flow meter – frequency input up to max. 10 kHz, designed for OC (open collector); max. overload of frequency 20%;
- From the water meter – input up to max. 10 kHz, with coverage of oscillation max. 500 Hz intended for REED contact or OC (open collector).

Input signals for quantity: temperature

- Value of electric resistance from temperature resistance sensors Pt 100, Pt 200, Pt 500 or Pt 1000 in 4-wire connection;

Output signals (optional according to design):

- 1 passive analogue current output signal with galvanic separation Iout, (4 to 20) mA, load resistor (0 to 500) Ω, output power supply (10 to 36) V DC, output quantity and range can be set-up by the user, e.g. for instantaneous re-calculated flow;
- 1 output with open collector with galvanic separation, function: impulse output or signalling of errors and alarms, adjustable length of pulse (100 to 900) ms, pulse frequency max. 3000 imp/h (can be overloaded by 20%), external source max. 70 V DC, max. 20 mA, function of module, choice of output quantity and range can be set-up by the user.

2.5 Firmware version:

Articles 2.5.1 and 2.5.2, version of SW, CRC16
Articles 2.5.3 and 2.5.4, version of SW, CRC32

2.5.1, single version (one measuring circuit), INMAT 57, CRC16

For heat measurement: Water 1.xx/xxxx

The version is displayed in the following form: "Name X.XX/XXXX"

X.--/---- Software version

-.XX/XXXX User configuration code

Checksum for SW version Water 1.00/MID-, 0xA343

2.5.2, double version (one or two measuring circuits), INMAT 57D, CRC16

SW version 1st, Application I: Water 2.00/MID-

Application II: -

Checksum for SW version 1st: 0xF254

SW version 2nd, Application I: Water 2.00/MID-
Application II: Water 2.00/MID-
Checksum for SW version 2nd: 0xB6A3

2.5.3, single version (one measuring circuit), INMAT 57, CRC32

For heat measurement: Water 1.02/MID-
The version is displayed in the following form: "Water 1.02/MID-
Checksum: 0x67A17ED7

2.5.4, double version (one or two measuring circuits), INMAT 57D, CRC32

SW version 1st, Application I: Water 2.02/MID-
Application II: -
Checksum for SW version 1st: 0xCC98D5EE
SW version 2nd, Application I: Water 2.02/MID-
Application II: Water 2.02/MID-
Checksum for SW version 2nd: 0xE2D6FBA0

2.6 Parameters of inputs

From flow meter	current:	(0 to 20/4 to 20) mA,
	frequency:	(0 to 10) kHz
From water meter	impulse:	max. 500 Hz
From temperature sensor	resistance:	Pt 100, Pt 200, Pt 500, Pt 1000
	pursuant to ČSN EN 60751, in 4-wire connection	

The following types of flow sensors can also be connected:
- with impulse output (0-500) Hz
- with frequency output (0-10) kHz
- with linear output (0 to 20/4 to 20) mA

2.7 Ranges of input quantities

Temperature in transfer piping:	(0-200) °C
Temperature in return piping:	(0-200) °C
Temperature difference:	(3-200) K

2.8 Parameters of outputs

Current output

Output signal:	(4 to 20) mA
Power supply of output:	24 V DC (10 to 36 V DC)
Galvanic separation:	500 V

Impulse output	output with open collector with galvanic separation
Function:	impulse output or signalling errors and alarms
Pulse length:	adjustable approx. 100 ms to 900 ms
Pulse frequency:	max. 3000 imp per hour (overload capacity 20%)
External source:	max 70 V DC, max. 20 mA (type 5 mA)
Galvanic separation:	500 V
Logical levels:	1 – transistor switched on, 0 – transistor switched off

2.9 Communication interface

Depending on meters design, INMAT 57 (single version) is equipped with one communication interface (RS485 or M-Bus). Double version INMAT 57D handles with two interfaces (RS 485, M-BUS or optical). Interfaces are galvanic separated. Bi-directional communication line is used for communication of one or more units with the computer. By means of the interface, it is possible to read the measured and assessed data. Furthermore, it is possible to set-up some parameters (date, time, user constants, parameters of communication interface, …).
Implicit set-up of parameters from the manufacturer: address 0, transmission speed 9600 Bd, without parity.

Serial line RS485 (input/output)
The connection is realized with the structure of the bus type. It is possible to connect max. 30 devices without a repeater. As the connecting medium, twisted two-wire (twist) is used most frequently with the maximum recommended length of 1200 m. Transmission speed is optional; maximum is 1152000 Bd. The terminating resistor is connected (in case of the end station) with the switch-over DIP above the right part of the terminal board – by switching over to the position ON.

Serial line M-Bus (input/output)
Transmission speed is optional; maximum is 9600 Bd.

Optical line (only by double version)
Bidirectional communication is determined to the communication of one meter with PC by help of opto-head. Data-transmission speed is optional, max. value 9600 Bd. Line is galvanic separated.

3 Test

Technical tests of INMAT 57 were performed pursuant to ČSN EN 1434-4. Test report No. 6015-PT-P0013-12 of 15 January 2012.
Technical tests of meter INMAT 57D was performed pursuant a standard EN 1434-4:2015, resp. OIML recommendation R75. Results are presented in Test report Nr. 6015-PT-P0008-17 of 6th February 2017. It has been also used a Declaration of manufacturer from 6th February 2017 (comparison of variants INMAT 57 and INMAT 57D).
Validation of INMAT 57D SW concerning a WELMEC Guide 7.2 was performed by CMI TESTCOM Praha. Results are presented in Test report Nr. 8553-PT-S1009-16 from 24th November 2016.
As for an extention of SW version on CRC32 regarding WELMEC Guide 7.2:2021, results of meters´s INMAT 57 and INMAT 57D testing are presented in Test report of CMI, Nr. 6015-PT-P0003-22 from 21st March 2022, and in Test report of CMI TESTCOM, Nr. 6011-PT-SW003-22 from 14th January 2022.

4 Compliance mark and descriptive designation

On the meter, the following data shall be identified:

a) On the production label located on the side of the box of the calorimetric counter:

- "CE" mark and additional metrological designation,
- Number of the EU-type examination certificate,
- Name or trademark of the manufacturer and postal address
- Manufacturing number,
- Year of manufacture (unless it is a part of the manufacturing number),
- Class of environment A, C according to ČSN EN 1434:2015
- Class of mechanical environment M1
- Class of electromagnetic environment E2.

b) On the production label located on the measurement cartridge:

• Name and type of the meter:	INMAT 57, INMAT 57D
• Number of the EU-type examination certificate,	……
• Manufacturing number,	……
• Year of manufacture (unless it is a part of the manufacturing number),	……
• Type of flow meter and its characteristics:	……
• Location of flow meter (place of installation):	……
• Type of thermometers and signal specification:	……
• Limit temperature values:	…… °C
• Limit values of temperature difference:	…… K
• Class of environment:	A, C
• Power supply:	……

c) On the display of the calorimetric counter in menu CONFIG, namely:

- Product number
- Manufacturing number of the calorimetric counter (equal to the number on the production label)
- Applied principle of flow measurement
- Range of flow and corresponding signal for used flow meter,
- Type of temperature sensor(s) (e.g. Pt100 4-wire)
- Location of flow meter (place of installation),
- Software version, CRC.

Examples of labelling (outside on the sticker, not on display) of INMAT 57 and INMAT 57D meters with SW version CRC32 are given on pictures 1, 2 and 3.

Examples of CRC32 on display of INMAT 57 and INMAT 57D meters for particular version of SW are presented on pictures 4, 5 and 6.

5 Test of meter

The calorimetric counter shall be verified in compliance with the standard ČSN EN 1434-5:2020. The test of the meter may also be performed without the box, i.e. an independent cartridge.

6 Sealing

The meters shall be provided with security marks after the performed tests with a positive result.

Number, type and location of the marks is (refer to figures 7, 8, 9 and 10 for INMAT 57, single version and refer to figures 11, 12, 13 and 14 for INMAT 57D, double version) as follows:

- on the cartridge 4x mark: three seals and one mark (seal-sealing sticker), refer to figures 9 and 10 for single version and refer to figures 13 and 14 for double version.
- Manufacturing label on the cartridge (refer to figure 11 for single version and refer to figure 15 pro double version): 1x mark (seal-sealing sticker),

Installation marks
In case of the meters INMAT 57, INMAT 57D, the following shall be secured after the installation with installation marks – seals:

- Securing the cover of the calorimetric counter and cover of the terminal board (refer to figure 7 for single version and to figure 12 for double version),
- Connection of external sensors of input quantities to the piping,
- Connection of the frequency or current output of the flow meter.

In case of performing a test of the cartridge (with the follow-up sealing) without the box of the calorimetric counter, it is necessary to ensure the cartridge and the box cannot be replaced after the repeated installation. In case protective barriers or overvoltage protections are installed and used (refer to figure 10), tests of the calorimetric counter shall be performed together with the said barriers or overvoltage protections.

Figure number 1 – INMAT 57, sticker, (single version), SW version Water 1.02/MID-

ZPA
NOVÁ PAKA
MADE IN CZECH REPUBLIC

type:INMAT57 457S21300
serial no: 21109993
TCM 311/12-4902
DC 24V max 4W IP65 A C
mech.class M1, EMC class E2
CE M22 1383
CRC="0x67A17ED7"
Verze aplikace = "Water 1.02/MID-"

Figure number 2 – INMAT 57D, sticker, (double version, one circuit), SW version Water 2.02/MID-

ZPA
NOVÁ PAKA
MADE IN CZECH REPUBLIC

type:INMAT57 457D26300
serial no: 21109021
TCM 311/12-4902
1/N AC 230V 50Hz 12VA IP65 A C
mech.class M1, EMC class E2
CE M22 1383
CRC="0xCC98D5EE"
Aplikace I = "Water 2.02/MID-"

Figure number 3 – INMAT 57D, sticker, (double version, two circuits), SW version Water 2.02/MID-

Figure number 4 – CRC32, INMAT 57, display, (single version), SW version Water 1.02/MID-

Figure number 5 – CRC32, INMAT 57D, display, (double version, one circuit), SW version Water 2.02/MID-

Figure number 6 – CRC32, INMAT 57D, display, (double version, two circuit), SW version Water 2.02/MID-

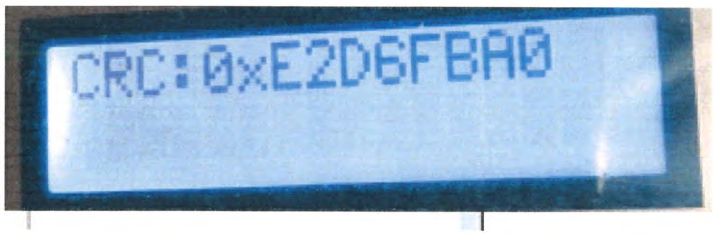

Figure number 7 – INMAT 57 (single version), dimensions and locations of marks

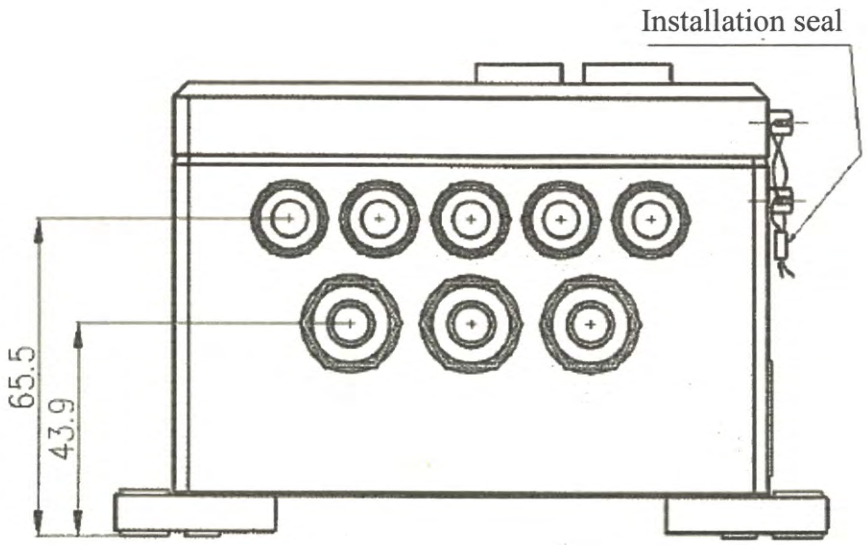

Figure number 8 – INMAT 57 (single version), dimensions

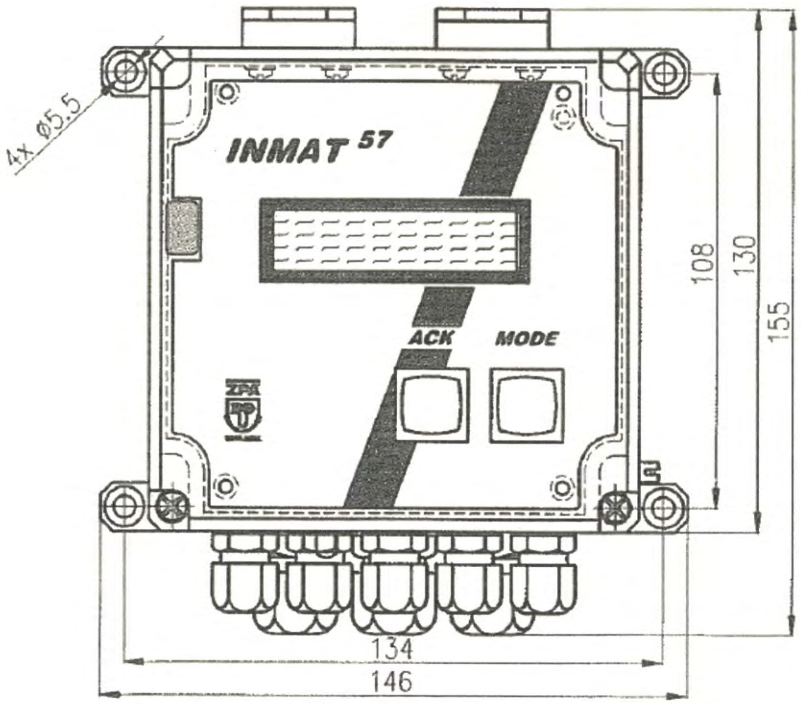

Figure number 9 – INMAT 57 (single version), location of marks

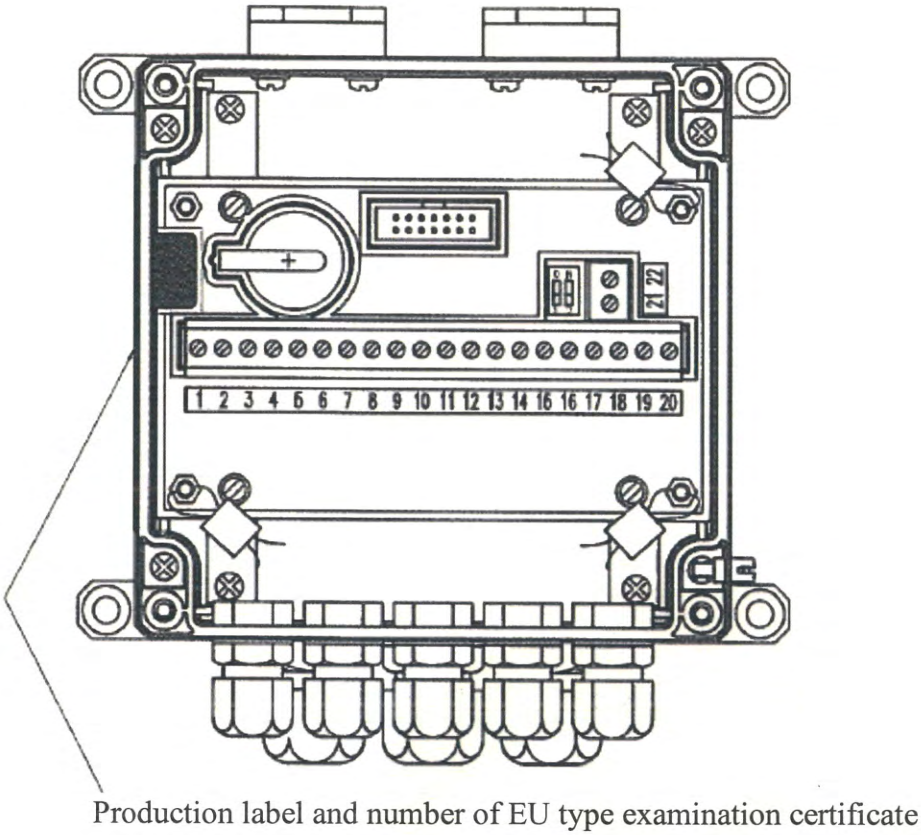

Figure number 10 – INMAT 57 (single version), location of marks

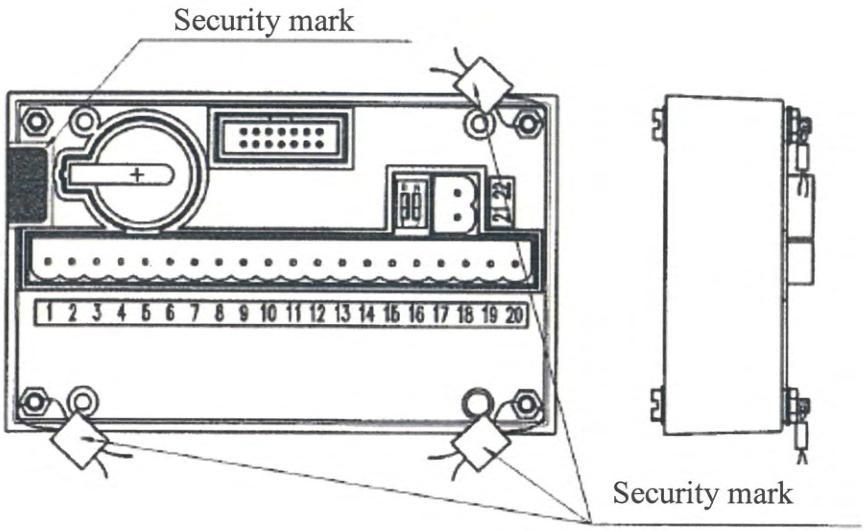

Figure number 11 – INMAT 57 (single version), location of marks

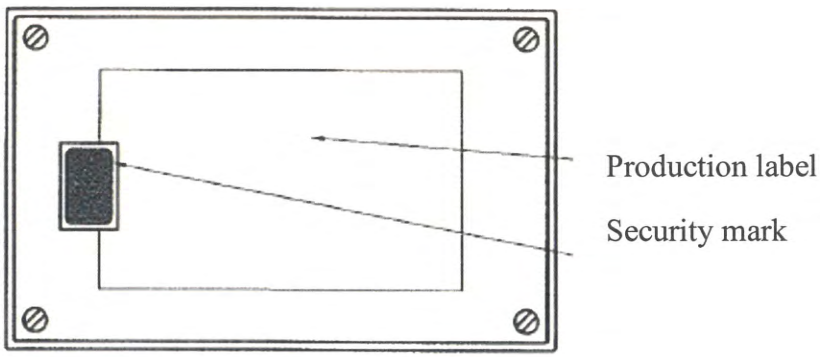

Figure number 12 – INMAT 57D (double version), location of marks

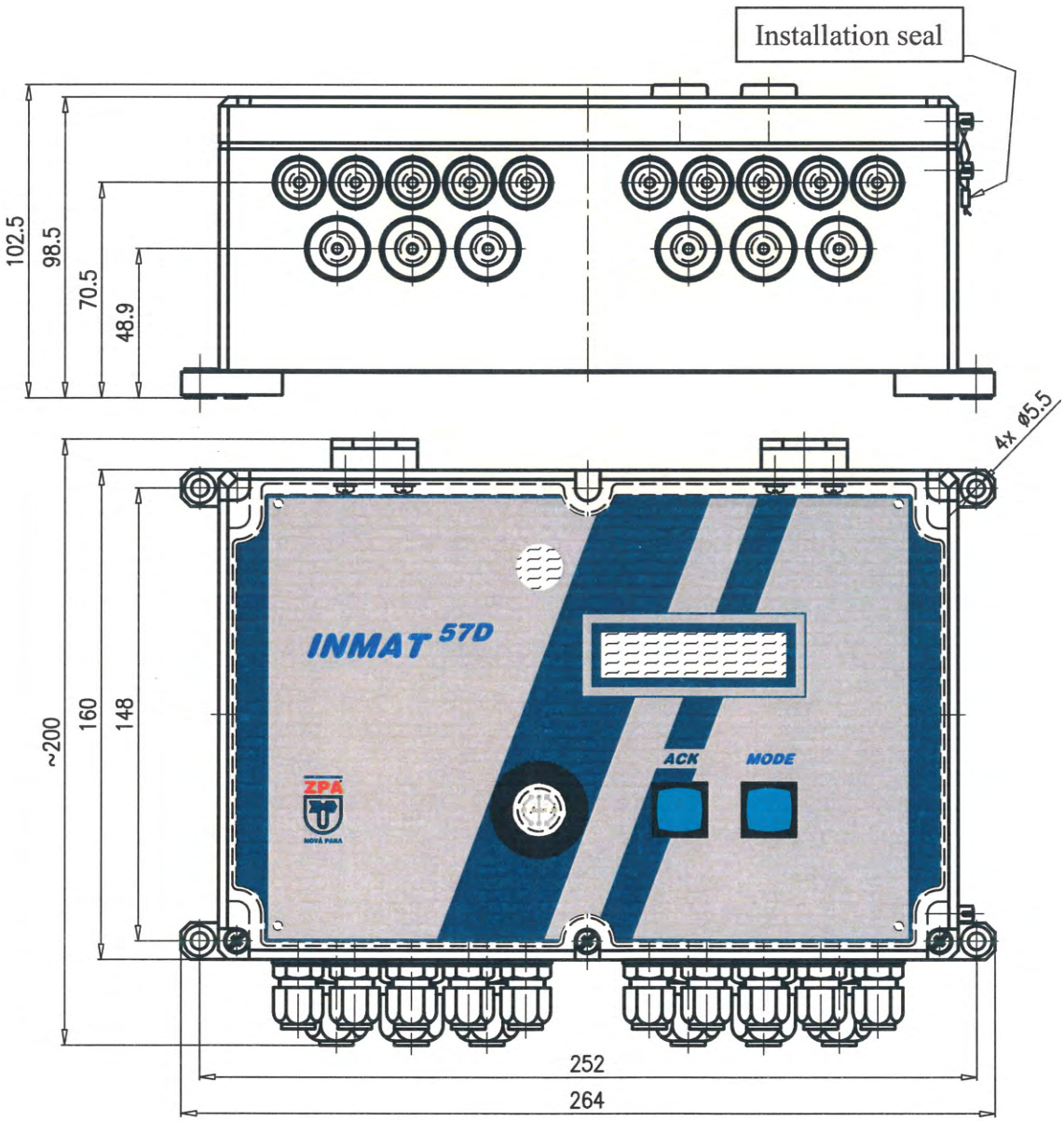

Český metrologický institut

Figure number 13 – INMAT 57D (double version), location of marks

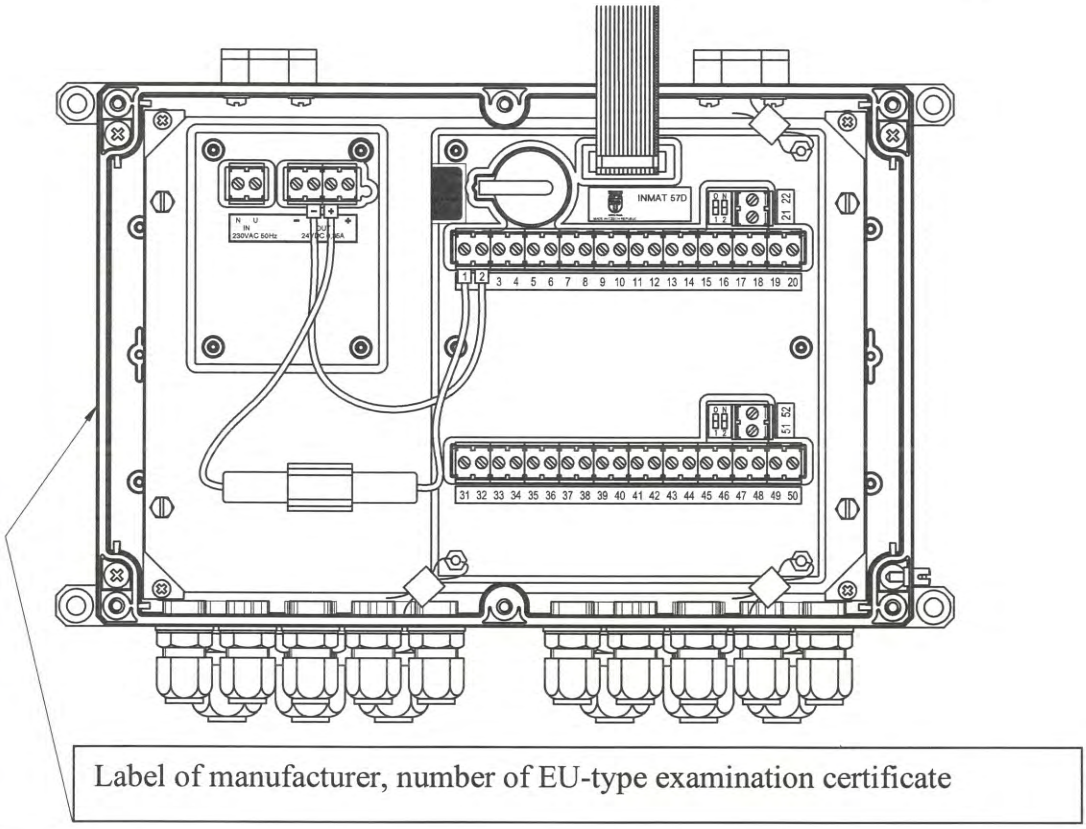

Figure number 14 – INMAT 57D (double version), location of marks

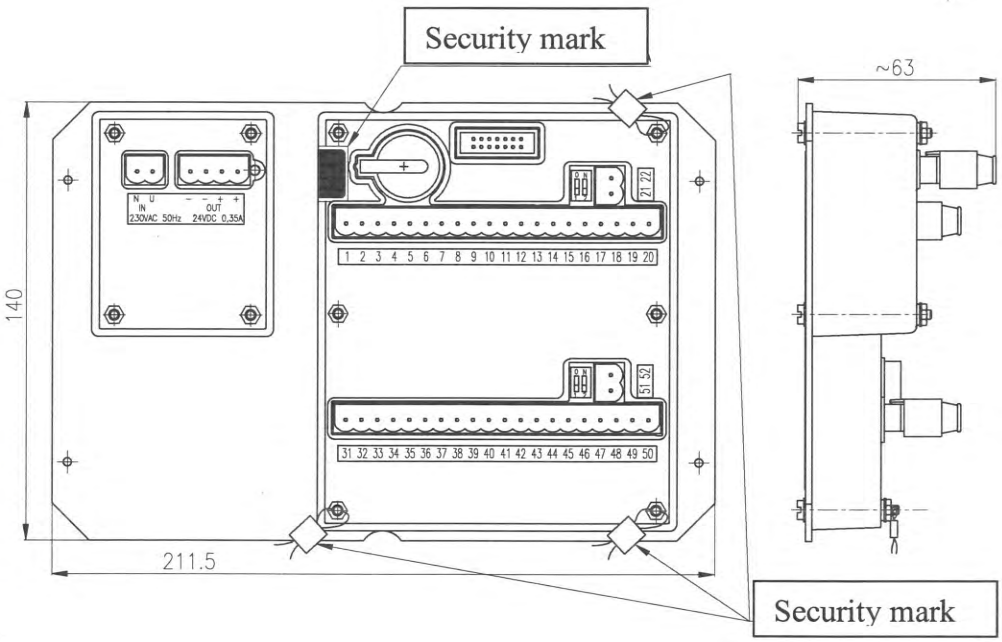
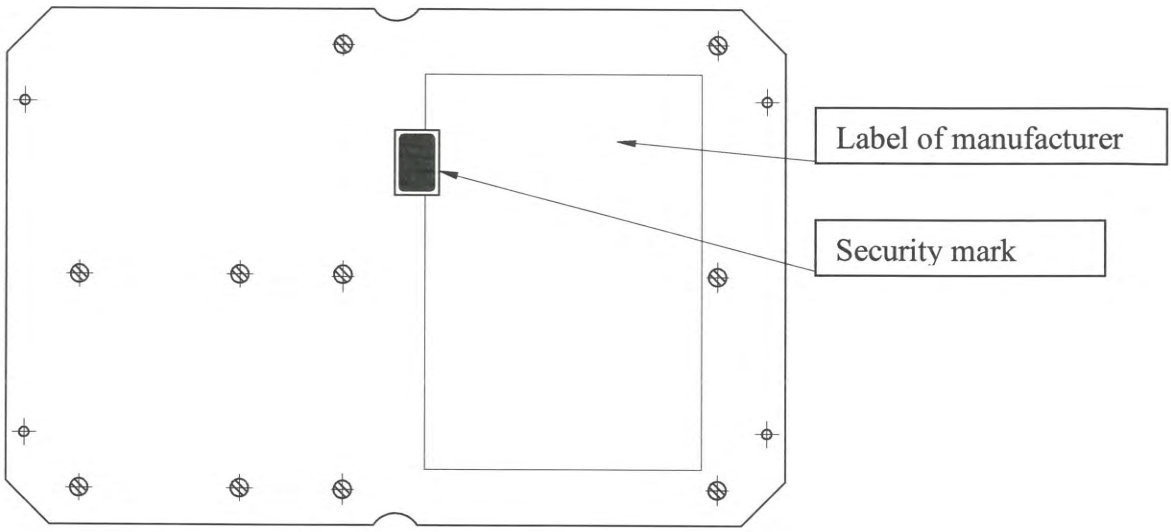
Figure number 15 – INMAT 57D (double version), location of marks